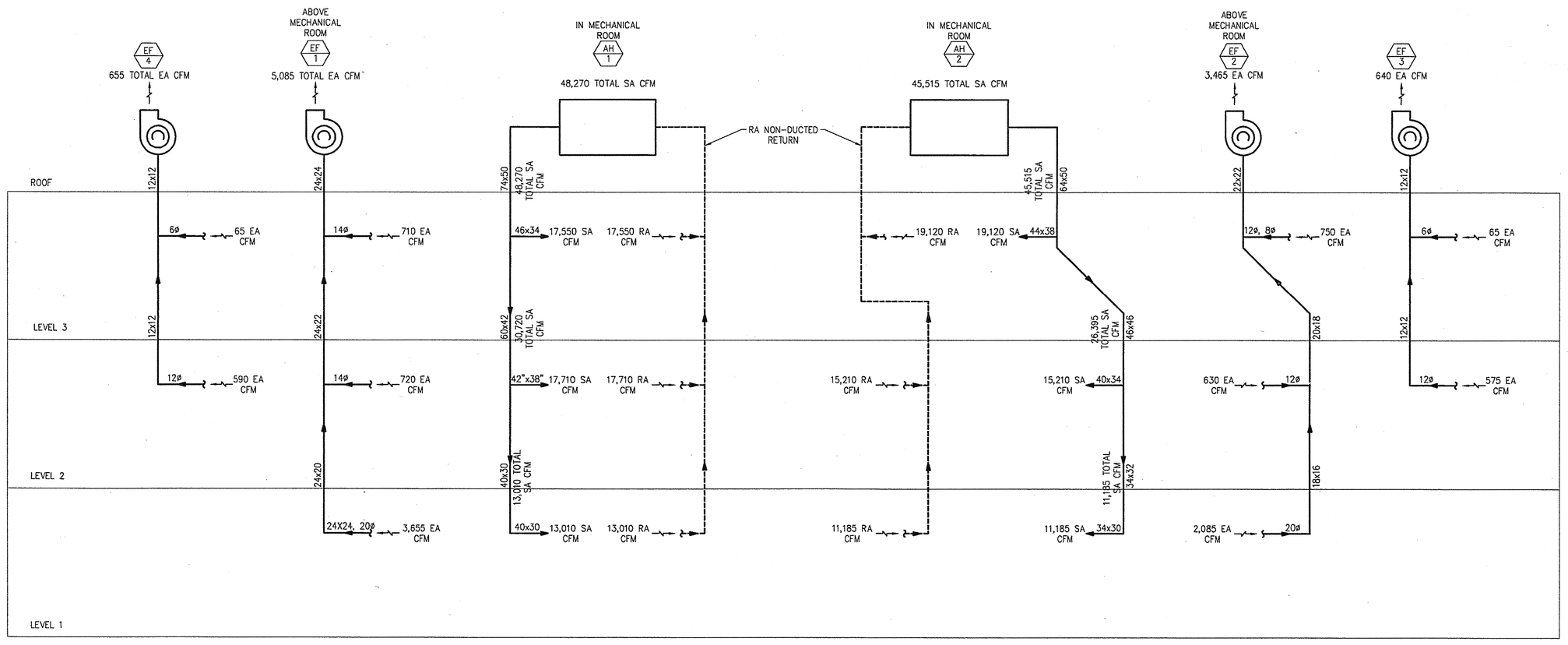

MECHANICAL AIRFLOW SYSTEM SCHEMATIC

SCALE NONE

1

SADDLEBACK COLLEGE

gkkworks
2355 Main Street Suite 220
Irvine | CA 92614
949 250 1500
949 955 2708 fax

Architect Seal

Consultant and Seal

REGISTERED PROFESSIONAL ENGINEER PAUL O FUNDAMENT No. 2635 MECHANICAL STATE OF CALIFORNIA

Fundament & Associates Inc. Engineering Consultants
26 Executive Park, Suite 100, Irvine CA 92614 (949) 251-1131

Agency Approval

VERIFICATION STAMP DIV OF THE STATE ARCHITECT OFFICE OF REGULATION SERVICES 04 109129 TB DATE MAY 07 2008

No.	Date	Revision/Issue

Project Name

JAMES B. UTT MEMORIAL LEARNING RESOURCE CENTER RENOVATION

28000 Marguerite Parkway
Mission Viejo, California 92692

Checked By

Drawn By GC

Sheet Title

MECHANICAL AIRFLOW SYSTEM SCHEMATICS

Sheet Number

M5.00

Project Number 04-111

Scale 1/8"=1'-0"

© 2008 gkkworks, All Rights Reserved
NO PART OF THE CONTENTS OF THIS DOCUMENT MAY BE REPRODUCED OR TRANSMITTED IN ANY FORM OR BY ANY MEANS WITHOUT THE WRITTEN PERMISSION OF GKKWORKS.

J:\7113-Saddleback Library\Mech\M500.dwg 04/16/2008

OR53177-51697 P1 S2 - R C CONSTRUCTION SERVICES - PG 176 OF 235 (P1 S2) 1 SET.1IF - 2/3/2010 - 15:34