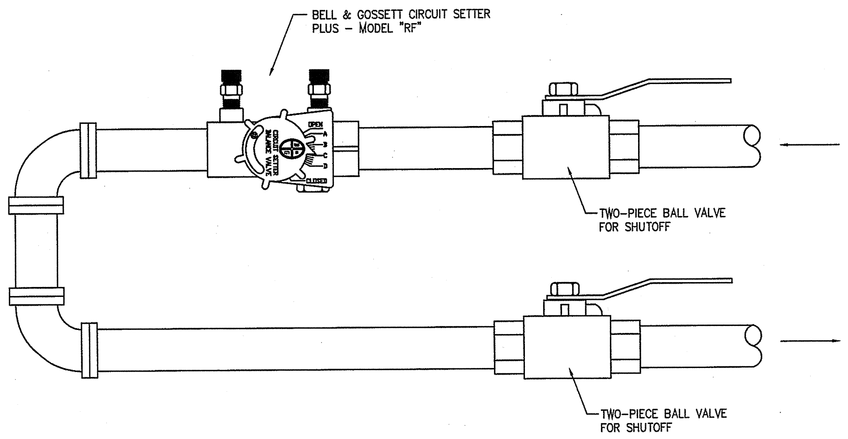

TYPICAL END OF PIPE LOOP CONFIGURATION

SCALE NONE | 3

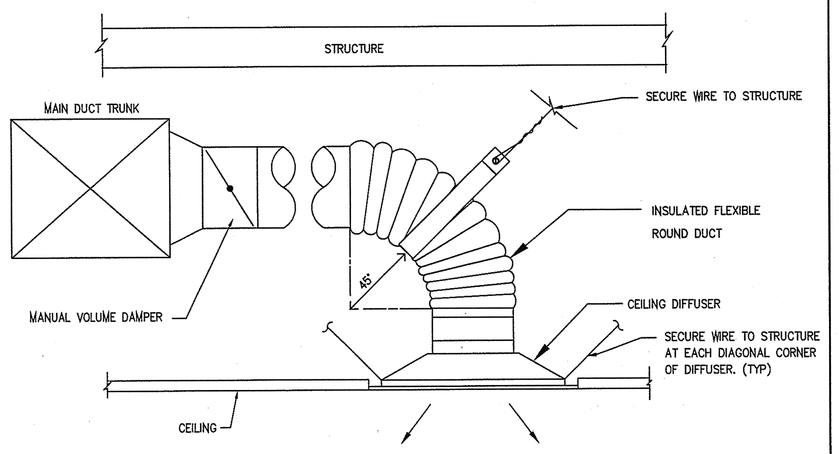

NOTES:

1. WHERE HEADROOM PERMITTED (R=D) CONNECTION TO DIFFUSER SHALL BE MADE AS SHOWN.
2. MIN. FLEX DUCT LENGTH SHALL BE 5'-0". MAX. FLEX DUCT LENGTH SHALL BE 7'-0"

TYPICAL CEILING DIFFUSER DETAIL

SCALE NONE | 2

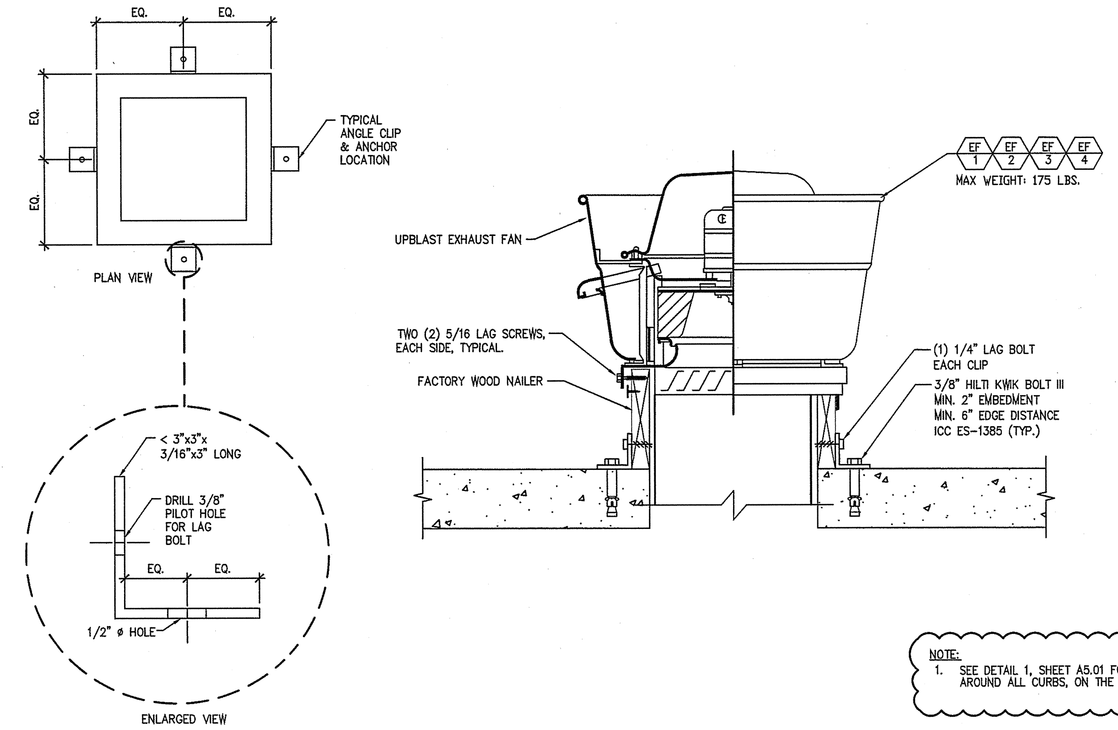

NOTE:

1. SEE DETAIL 1, SHEET A5.01 FOR ROOFING AROUND ALL CURBS, ON THE ROOF

TYPICAL ROOF EXHAUST FAN ANCHORAGE

SCALE NONE | 1

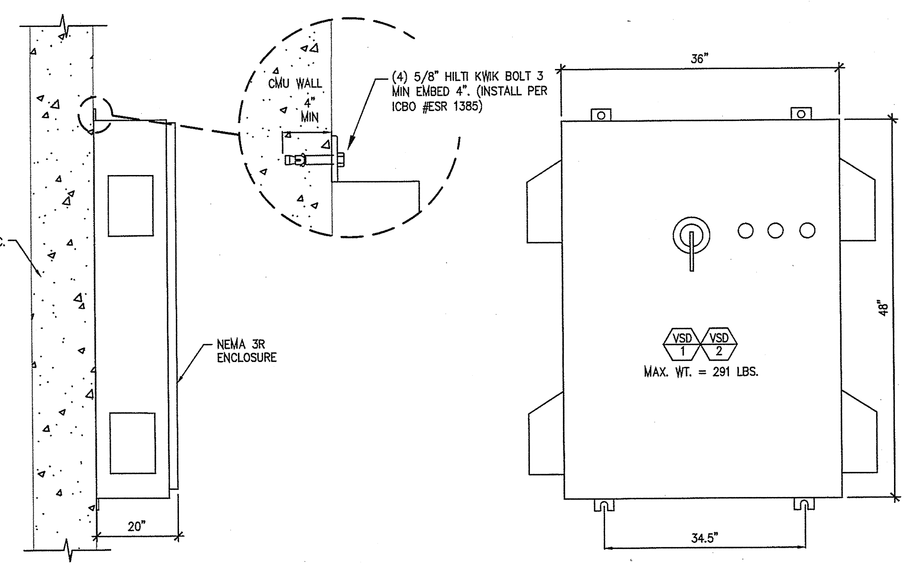

TYPICAL VARIABLE SPEED DRIVE DETAIL

SCALE NONE | 6

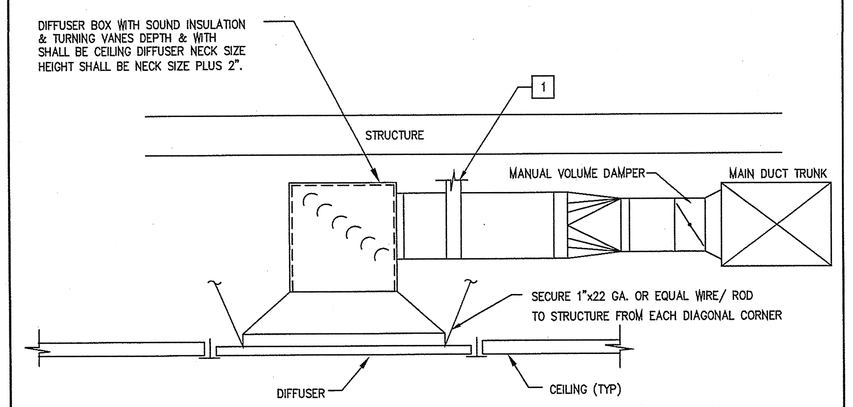

NOTES:

1. ALL VERTICAL NON-SEISMIC DUCT HANGER STRAPS SHALL BE SIZED AND SPACED PER CHAPTER 6, 1998 CMC. (TYP.)
2. SEISMIC BRACING SHALL BE SIZED AND SPACED PER "SMACNA DUCT CONSTRUCTION STANDARDS," AND "SEISMIC RESTRAINT MANUAL" 2000 SUPPLEMENT LEVEL "AA".

TYPICAL CEILING DIFFUSER PLENUM ASSEMBLY DETAIL

SCALE NONE | 5

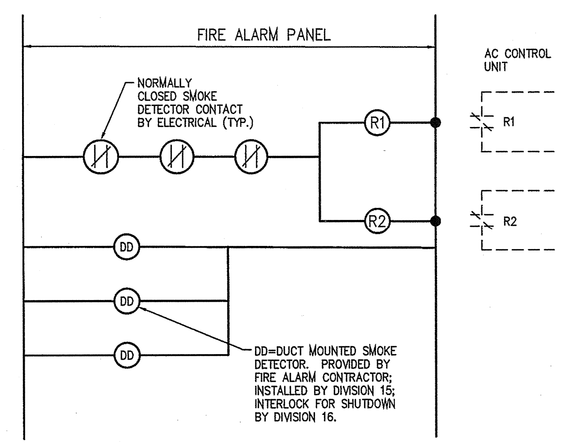

NOTES

1. SYSTEMS PROVIDING HEATING OR COOLING AIR IN EXCESS OF 2000 CFM TO ENCLOSED SPACES WITHIN THE BUILDING SHALL BE EQUIPPED WITH AN AUTOMATIC SHUTOFF. AUTOMATIC SHUTOFF SHALL BE ACCOMPLISHED BE INTERRUPTING THE POWER SOURCE OF THE AIR MOVING EQUIPMENT. SMOKE DETECTORS SHALL DETECT PRODUCT OF COMBUSTION OTHER THAN HEAT AND SHALL COMPLY WITH CALIFORNIA BUILDING CODE. DETECTORS SHALL BE INSTALLED IN ACCORDANCE WITH THE MANUFACTURES INSTALLATION INSTRUCTIONS. SUCH DEVICES SHALL BE COMPATIBLE WITH THE OPERATING VELOCITIES, PRESSURES, TEMPERATURES, AND HUMIDITIES OF THE SYSTEM. THE SMOKE DETECTORS SHALL ACTIVATE THE FIRE ALARM SYSTEM. (SECTION 609, C.M.C)
2. SEE FIRE ALARM DRAWINGS FOR ADDITIONAL INFORMATION. SEE 6/E5.04, 7/E5.04, 9/E5.01 & 10/E5.01.
3. COORDINATE QUANTITY OF RELAYS AND SWITCHING REQUIREMENTS WITH FIRE ALARM CONTRACTOR.
4. ALL LOW VOLTAGE CONDUIT AND WIRING ASSOCIATED WITH THERMOSTATS AND OR THE CONTROLS SYSTEM SHALL BE PROVIDED AND INSTALLED BY DIV. 15.

TYPICAL DUCT DETECTOR DIAGRAM / AC UNIT SHUTDOWN DETAIL

SCALE NONE | 4

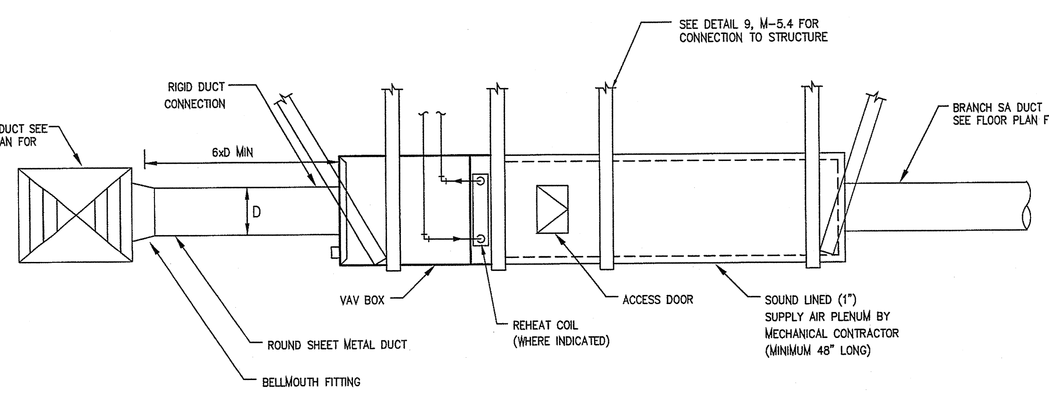

NOTES:

1. INSTALL ALL DUCTWORK PER SMACNA GUIDELINES. REFER TO "SMACNA DUCT CONSTRUCTION STANDARDS," LATEST EDITION.

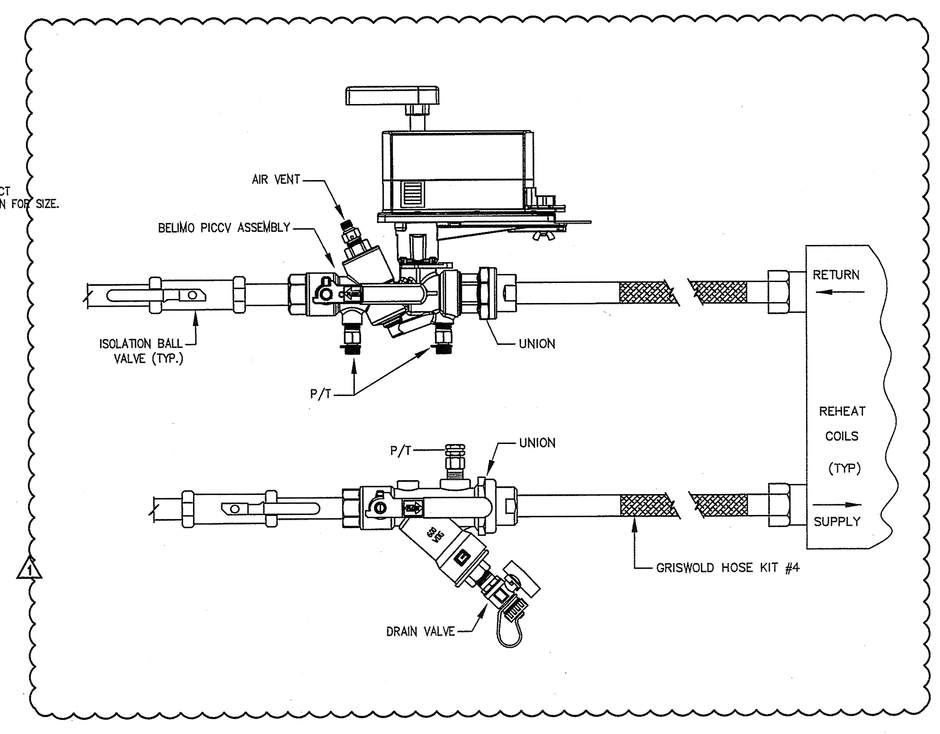

TYPICAL VAV BOX DETAIL

SCALE NONE | 8

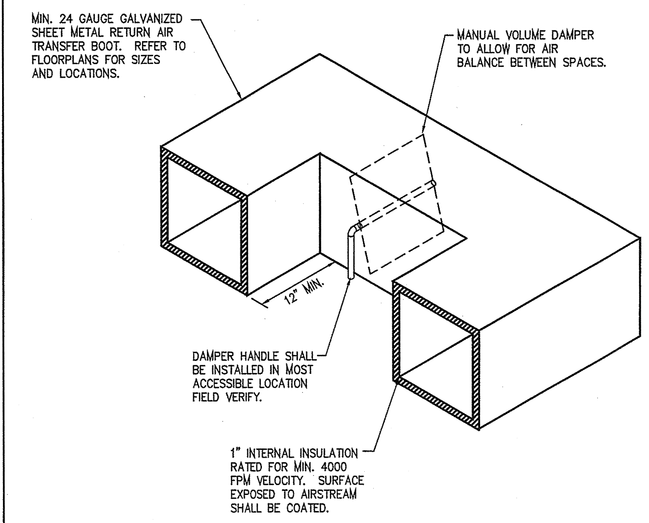

NOTES:

1. LENGTH OF DUCT BOOT SHALL BE AS REQUIRED TO PENETRATE GYP BOARD AND FRAMING AND ALLOW FOR FULL OPERATION OF MANUAL VOLUME DAMPER.
2. COORDINATE ALL LOCATIONS AND SIZES WITH FRAMING CONTRACTOR TO ALLOW FOR PROPER OPENING SIZES THROUGH FRAMING MEMBERS.
3. PROVIDE ANGLE CLIPS AND TEKS SCREWS TO SECURE BOOT TO STEEL STUDS.
4. ALL DIMENSIONS SHOWN ON FLOOR PLANS SHALL BE NET CLEAR INSIDE DIMENSIONS.
5. CONTRACTOR MAY SUBSTITUTE A "Z" SHAPED BOOT BY ROTATING ONE OF THE 90 DEGREE ELBOWS IN LIEU OF THE "U" SHAPED BOOT WHERE SPACE CONSTRAINT IS A CONCERN. BOOT MAY ALSO BE INSTALLED WITH THE OPENINGS FACING DOWN IN LIEU OF THE HORIZONTAL CONFIGURATION.
6. CONTRACTOR SHALL PROVIDE AND INSTALL RETURN AIR TRANSFER BOOT IN ALL AREAS UTILIZING A RETURN AIR PLENUM TYPE SYSTEM AS REQUIRED TO ALLOW FOR RETURN AIR TRANSFER BETWEEN ALL SPACES TO THE SOURCE OF AIR REMOVAL.
7. WHERE NOT SHOWN ON THE DRAWINGS, PROVIDE DUCT BOOT AS FOLLOWS BASED ON THE CFM VALUE OF AIR BEING TRANSFERRED:

0-600 CFM TRANSFER:	12x10 BOOT OR EQUAL
601-1400 CFM TRANSFER:	18x10 BOOT OR EQUAL
1400-2000 CFM TRANSFER:	18x10 & 12x10 BOOT
2001-2800 CFM TRANSFER:	(2) TWO 18x10 BOOTS

DIMENSIONS CAN BE SUBSTITUTED FOR THOSE LISTED ABOVE HAVING EQUAL OR GREATER FREE AREA AND RATIOS.

TYPICAL RETURN AIR TRANSFER BOOT DETAIL

SCALE NONE | 7

SADDLEBACK COLLEGE

gkkworks
2355 Main Street Suite 220
Irvine | CA 92614
949 250 1500
949 955 2708 fax

Architect Seal

Consultant and Seal

Fundament & Associates Inc.
Engineering Consultants
26 Executive Park, Suite 100, Irvine CA 92614 (949) 251-1131

Agency Approval

No.	Date	Revision/Issue
1		ADDENDUM #4

Project Name

JAMES B. UTT MEMORIAL LEARNING RESOURCE CENTER RENOVATION

28000 Marguerite Parkway
Mission Viejo, California 92692

Checked By | Drawn By

Sheet Title

MECHANICAL DETAILS

Sheet Number

M5.01

Project Number 04-111 | Scale AS NOTED

©2009 gkkworks, All Rights Reserved
NO PART OF THE CONTENTS OF THIS DOCUMENT MAY BE REPRODUCED OR TRANSMITTED IN ANY FORM OR BY ANY MEANS WITHOUT THE WRITTEN PERMISSION OF GKKWORKS.

OR531777-51697 P1 S2 - R C CONSTRUCTION SERVICES - PG 177 OF 235 (P1 S2) 1 SET.TIF - 2/3/2010 - 15:34
J:\7113-Saddleback Library\Mech\M501.dwg 09/10/2009