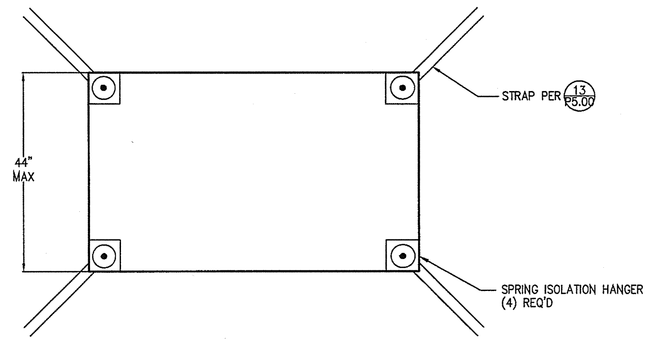

PLAN VIEW

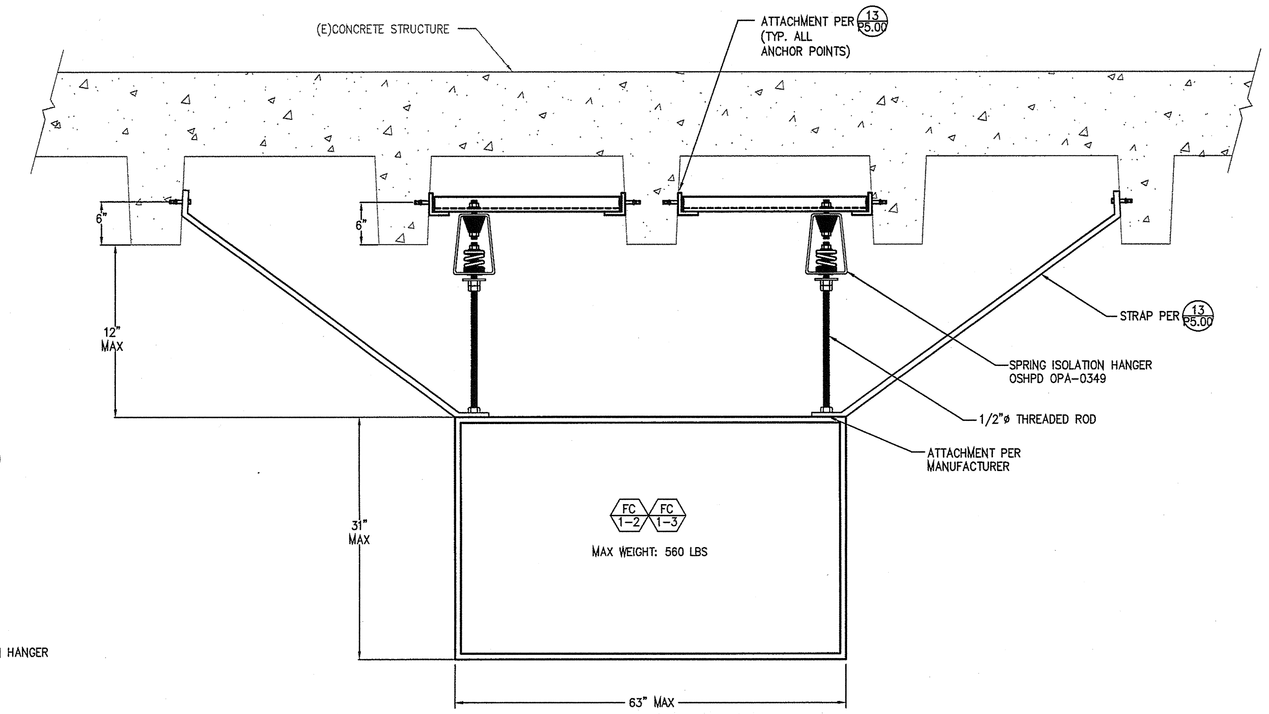

SECTION

NOTES:

1. SEE DETAIL 13 SHEET P5.00 FOR ATTACHMENT TO STRUCTURE. TYPICAL AT ALL ANCHOR POINTS.

TYPICAL SUSPENDED FAN COIL UNIT ANCHORAGE DETAIL

SCALE NONE 1

-	SCALE NONE	3
-	SCALE NONE	6
-	SCALE NONE	5
-	SCALE NONE	4

SADDLEBACK COLLEGE

gkkworks
2355 Main Street Suite 220
Irvine | CA 92614
949 250 1500
949 955 2708 fax

Architect Seal

Consultant and Seal

REGISTERED PROFESSIONAL ENGINEER
CHRIS FUNDAMENT
No. 24611
Exp. 9-30-10
MECHANICAL
STATE OF CALIFORNIA

Fundament & Associates Inc.
Engineering Consultants
26 Executive Park, Suite 100, Irvine CA 92614 (949) 251-1131

Agency Approval

No.	Date	Revision/Issue
1		ADDENDUM #4

Project Name

JAMES B. UTT MEMORIAL LEARNING RESOURCE CENTER RENOVATION

28000 Marguerite Parkway
Mission Viejo, California 92692

Checked By | Drawn By

Sheet Title

MECHANICAL DETAILS

Sheet Number

M5.03 1

Project Number 04-111 | Scale NONE

©2009 gkkworks, All Rights Reserved
NO PART OF THE CONTENTS OF THIS DOCUMENT MAY BE REPRODUCED OR TRANSMITTED IN ANY FORM OR BY ANY MEANS WITHOUT THE WRITTEN PERMISSION OF GKKWORKS.

J:\7113-Saddleback Library\Mech\M503.dwg 09/24/2009

OA31777-31697 P1 S2 - R C CONSTRUCTION SERVICES - PG 179 OF 235 (P1 S2) 1 SET.1IF - 2/3/2010 - 15:34