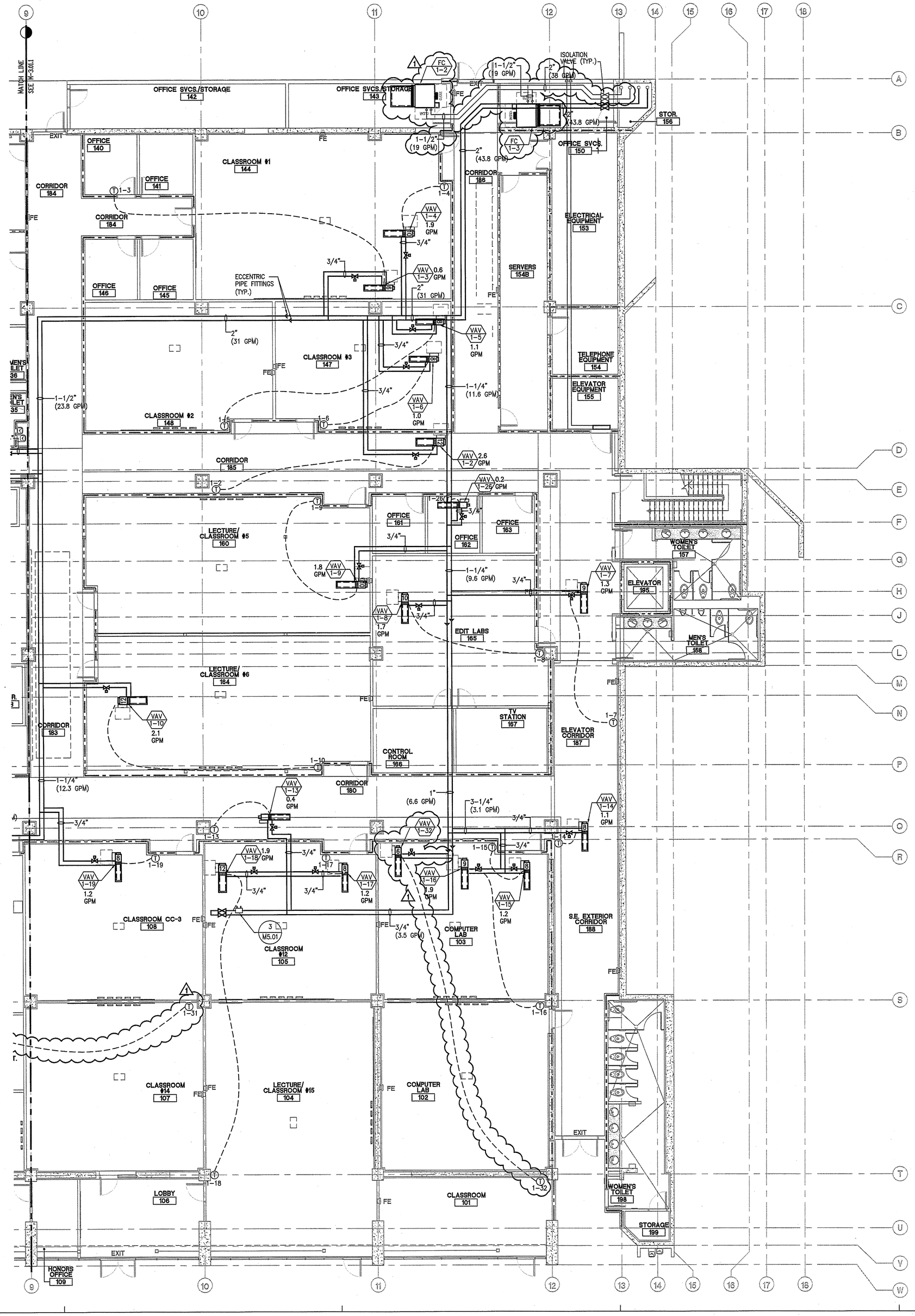

PIPE SIZING TABLE

PIPE SIZE	FLOW RATE
3/4"	0–3.5 GPM
1"	3.6–7 GPM
1-1/4"	7.1–15 GPM
1-1/2"	15.1–23 GPM
2"	23.1–45 GPM
2-1/2"	45.1–70 GPM
3"	70.1–150 GPM
4"	150.1–250 GPM
6"	250.1–800 GPM
8"	800.1–1500 GPM

0 8' 16' 32'

KEY PLAN

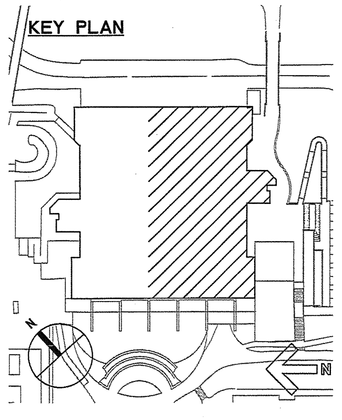

SADDLEBACK COLLEGE

gkkworks
2355 Main Street Suite 220
Irvine | CA 92614
949 250 1500
949 955 2708 fax

Architect Seal

Consultant and Seal

REGISTERED PROFESSIONAL ENGINEER MECHANICAL STATE OF CALIFORNIA

Fundament & Associates Inc.
Engineering Consultants
28 Executive Park, Suite 100, Irvine CA 92614 (949) 251-1121

Agency Approval

No.	Date	Revision/Issue
1		ADDENDUM #4

Project Name

JAMES B. UTT MEMORIAL LEARNING RESOURCE CENTER RENOVATION

28000 Marguerite Parkway
Mission Viejo, California 92692

Checked By | Drawn By

Sheet Title

MECHANICAL FIRST FLOOR PIPING PLAN (EAST)

Sheet Number

M3.012

Project Number 04-111 | Scale 1/8"=1'-0"

© 2009 gkkworks, All Rights Reserved
NO PART OF THE CONTENTS OF THIS DOCUMENT MAY BE REPRODUCED OR TRANSMITTED IN ANY FORM OR BY ANY MEANS WITHOUT THE WRITTEN PERMISSION OF GKKWORKS.

J:\7113-Saddleback Library\Mech\M3012.dwg 09/10/2009

OR331777-51697 P1 S2 - R C CONSTRUCTION SERVICES - PG 169 OF 235 (P1 S2) 1 SET.TIF - 2/3/2010 - 15:34