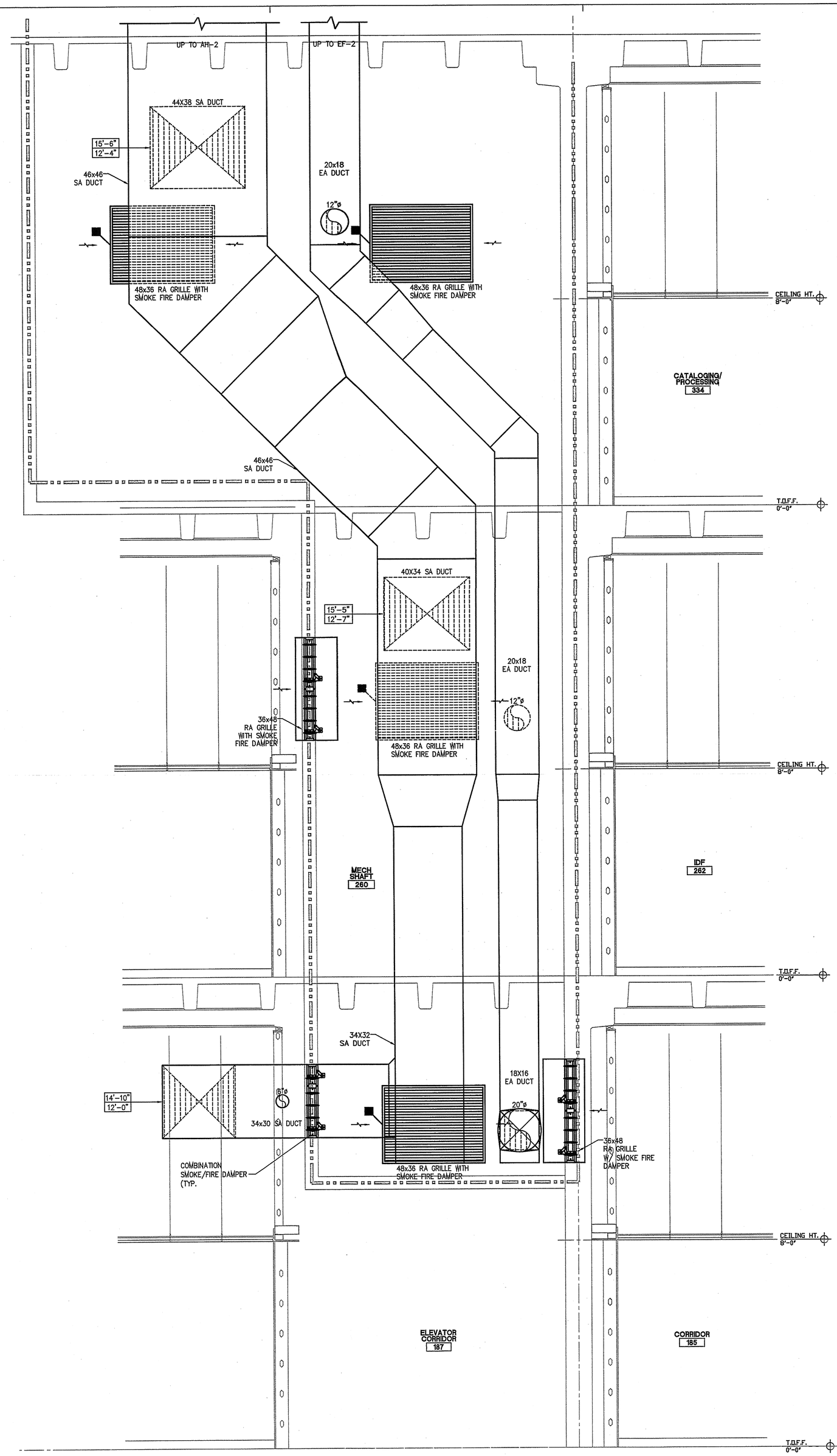

SECTION THROUGH MECHANICAL SHAFT — SCALE 1/2" = 1'-0" — 3

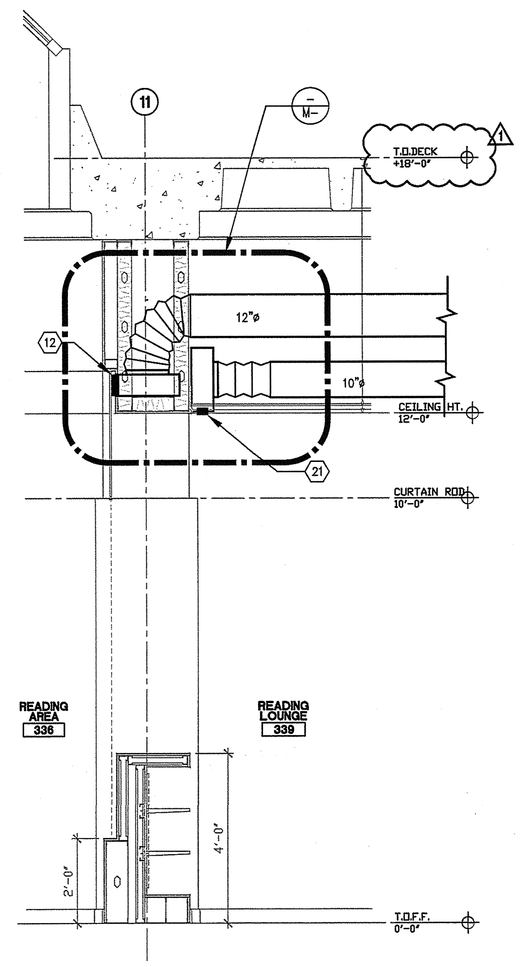

TYPICAL SIDEWALL AND CEILING LINEAR DIFFUSER SECTION — SCALE 1/2" = 1'-0" — 2

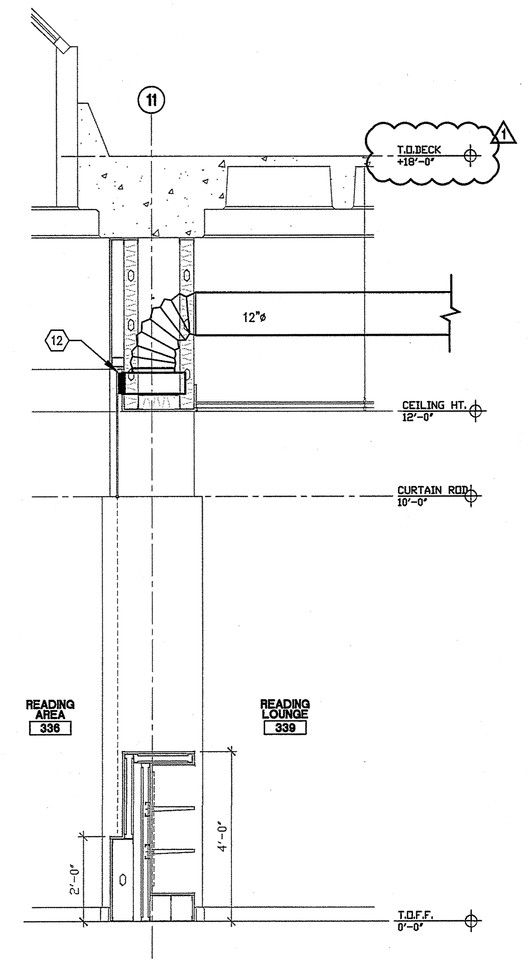

TYPICAL SIDEWALL AND CEILING LINEAR DIFFUSER SECTION — SCALE 1/2" = 1'-0" — 1

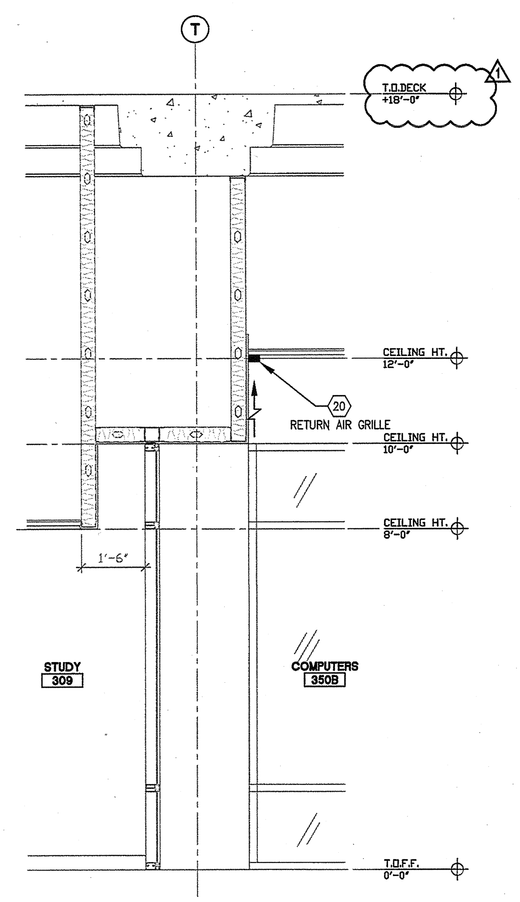

TYPICAL SIDEWALL AND CEILING LINEAR DIFFUSER SECTION — SCALE 1/2" = 1'-0" — 5

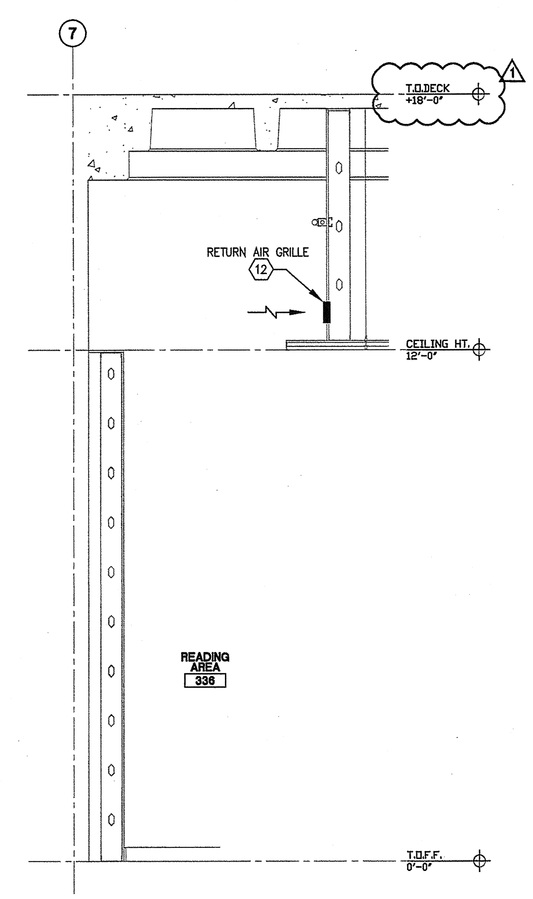

TYPICAL SIDEWALL AND CEILING LINEAR DIFFUSER SECTION — SCALE 1/2" = 1'-0" — 4

SADDLEBACK COLLEGE

gkkworks
2355 Main Street Suite 220
Irvine | CA 92614
949 250 1500
949 955 2708 fax

Architect Seal

Consultant and Seal

REGISTERED PROFESSIONAL ENGINEER — No. 24-31011 — Exp. 9-30-10 — MECHANICAL — STATE OF CALIFORNIA

Fundament & Associates Inc. Engineering Consultants
25 Executive Park, Suite 100, Irvine CA 92614 (949) 261-1181

Agency Approval

No.	Date	Revision/Issue
1		ADDENDUM #4

Project Name

JAMES B. UTT MEMORIAL LEARNING RESOURCE CENTER RENOVATION
28000 Marguerite Parkway
Mission Viejo, California 92692

Checked By | Drawn By GC

Sheet Title

MECHANICAL SECTIONS

Sheet Number

M4.01

Project Number 04-111 | Scale N.T.S.

© 2009 gkkworks, All Rights Reserved
NO PART OF THE CONTENTS OF THIS DOCUMENT MAY BE REPRODUCED OR TRANSMITTED IN ANY FORM OR BY ANY MEANS WITHOUT THE WRITTEN PERMISSION OF GKKWORKS.

J:\7113-Saddleback Library\Mech\M401.dwg 09/10/2009

OR531777-51697 P1 S2 - R C CONSTRUCTION SERVICES - PG 174 OF 235 (P1 S2) 1 SET.TIF - 2/3/2010 - 15:34