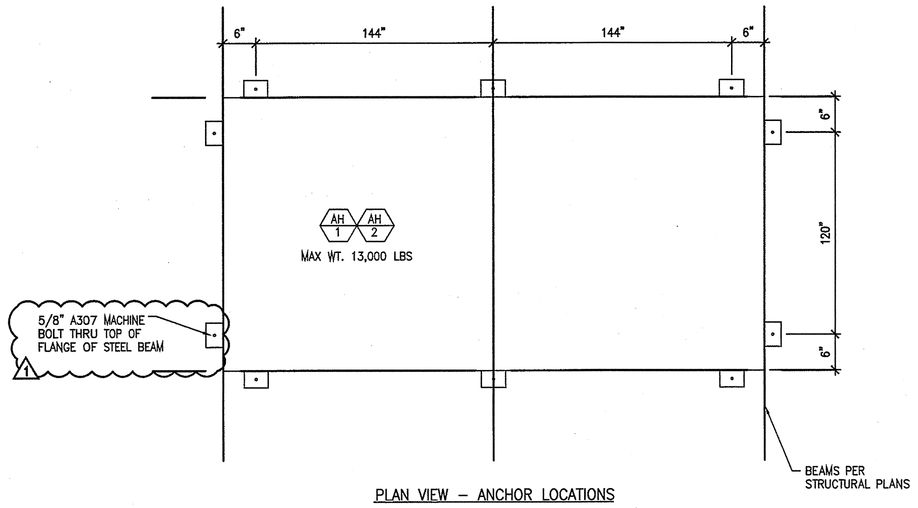

PLAN VIEW – ANCHOR LOCATIONS

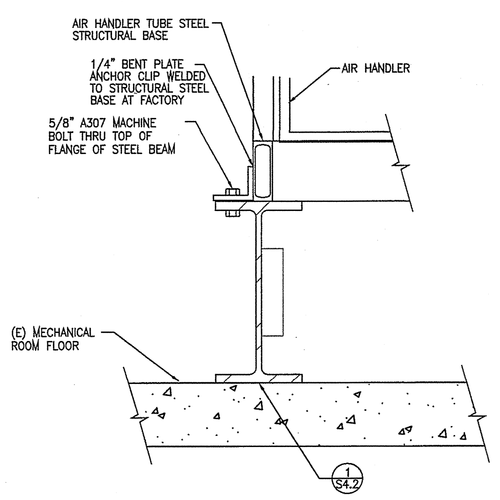

TYPICAL AIR HANDLER ANCHORAGE DETAIL

SCALE NONE | 3

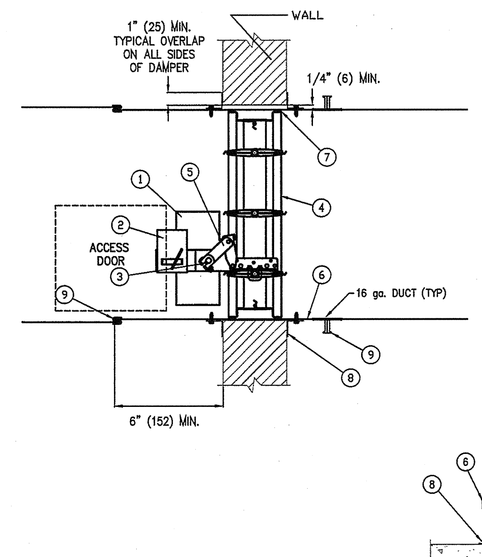

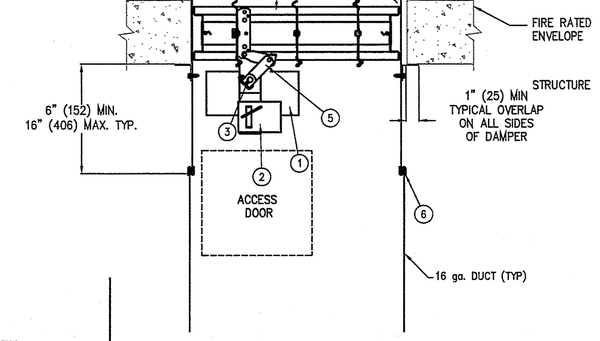

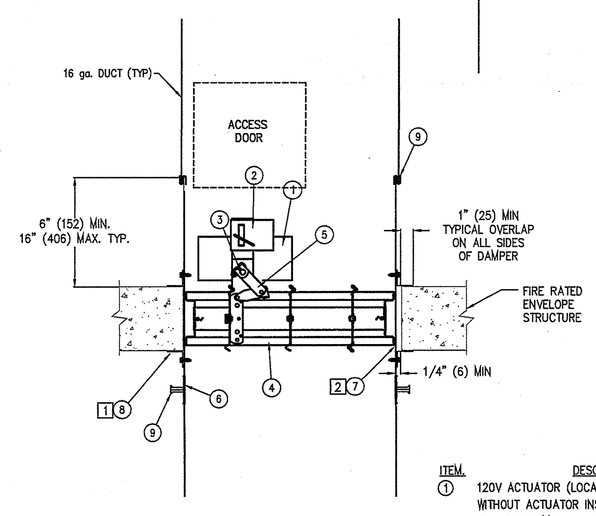

ITEM.	DESCRIPTION
1	120V ACTUATOR (LOCATION MAY VARY). DAMPER MAY BE SUPPLIED WITHOUT ACTUATOR INSTALLED. RUSKIN'S UL LISTED FIRE DAMPER ACTUATORS MAY BE FIELD INSTALLED IF PROPERLY LABELED. SEE ACTUATOR INSTALLATION INSTRUCTIONS FOR FIELD MOUNTING OF DAMPER ACTUATORS.
2	OPTIONAL FIRESTAT OR SP100
3	AUXILLARY OPERATING JACK SHAFT
4	DAMPER
5	OVER CENTER LOCK
6	SLEEVE
7	CAULKING MATERIAL (MAY BE ON EITHER SIDE OF DAMPER FRAME
8	PFMA OR CONVENTIONAL MOUNTING ANGLES
9	S-JOINT/DUCT MATE, SLEEVE TO DUCT

COMBINATION SMOKE/ FIRE DAMPER DETAIL

SCALE NONE | 2

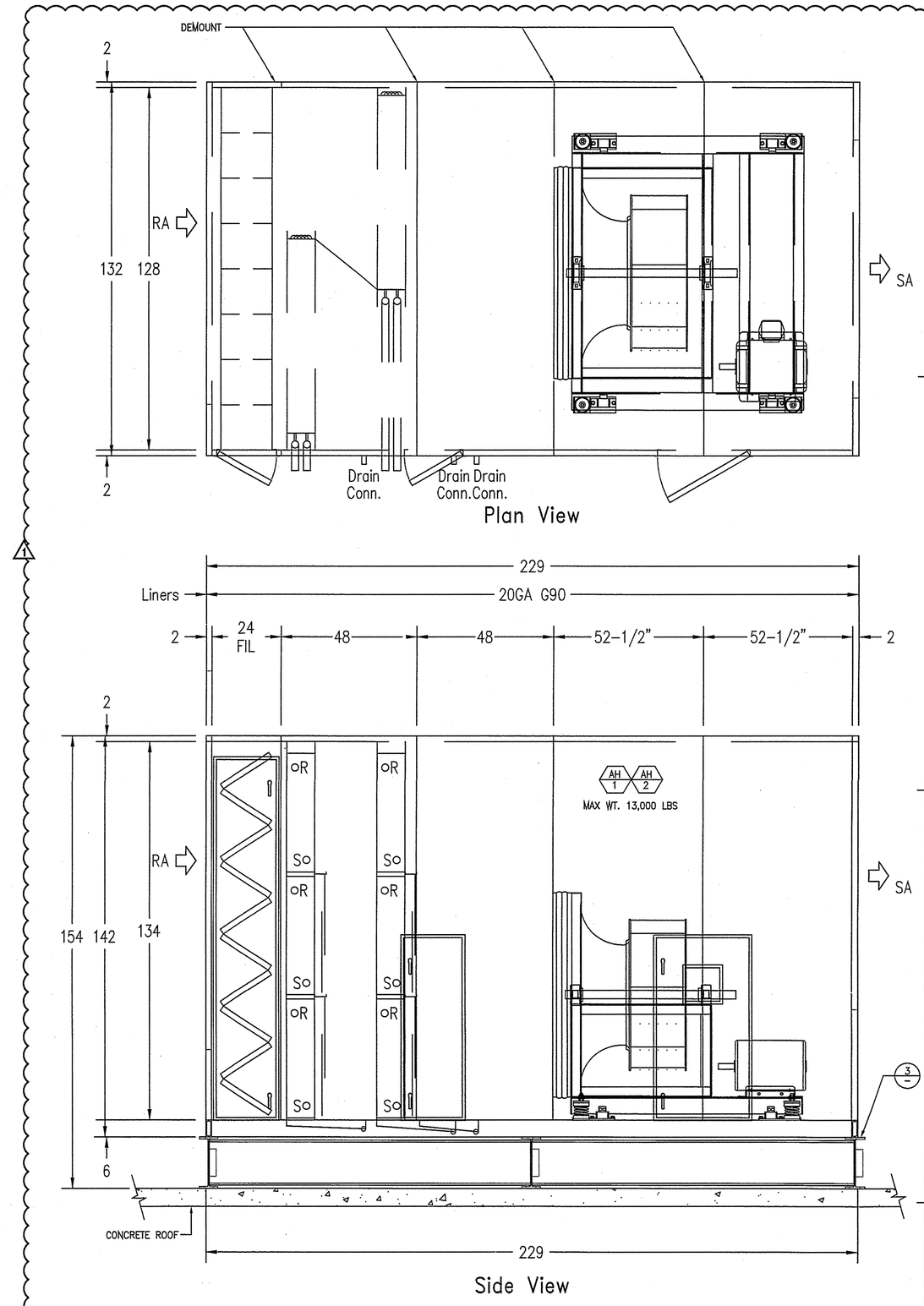

AIR HANDLER AH-1 AND AH-2 DETAIL

SCALE NONE | 1

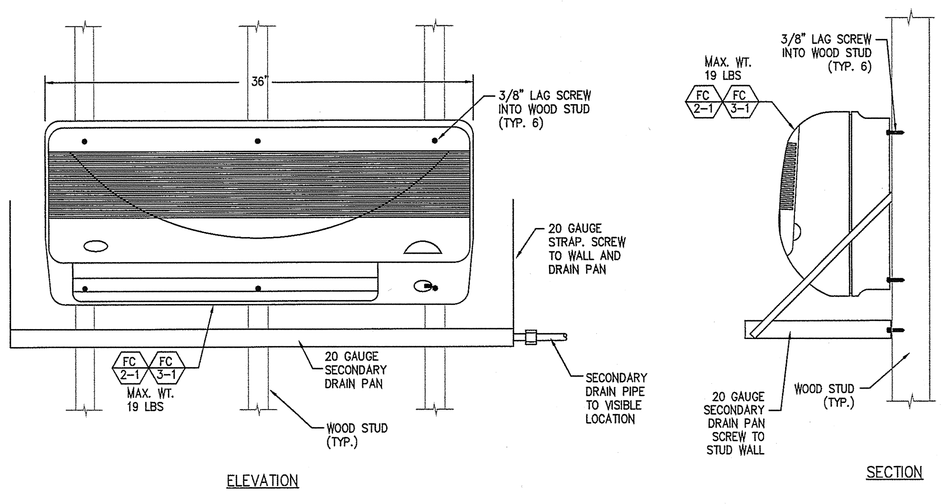

ELEVATION

SECTION

NOTES:

1. INSTALL CONDENSATE PUMP ON MAIN CONDENSATE ONLY IF GRAVITY FLOW CAN NOT BE ACHIEVED.

TYPICAL WALL MOUNTED FAN COIL ANCHORAGE DETAIL

SCALE NONE | 7

NOTE:
1. SEE DETAIL 6, SHEET A5.02 FOR ROOFING AROUND ALL PADS, PLATFORMS, ETC. ON THE ROOF.

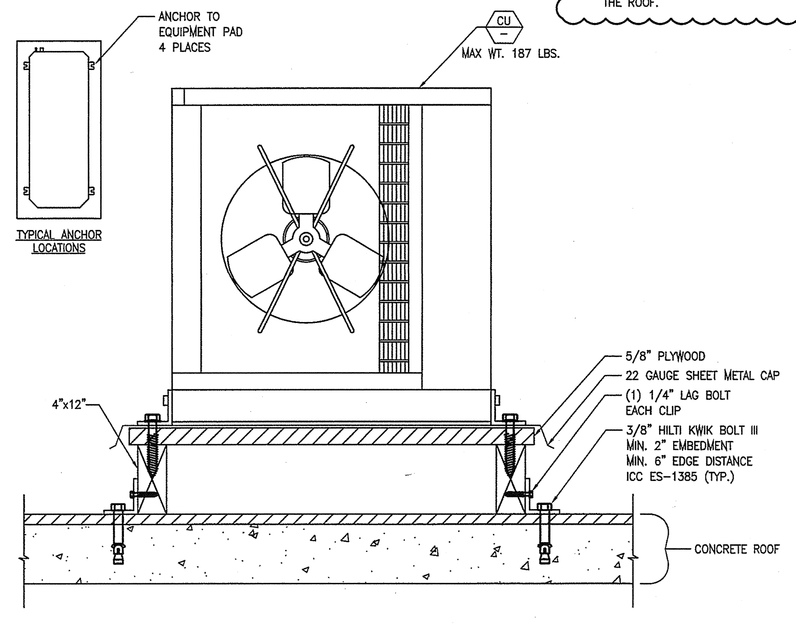

TYPICAL CONDENSING UNIT ANCHORAGE DETAIL

SCALE NONE | 6

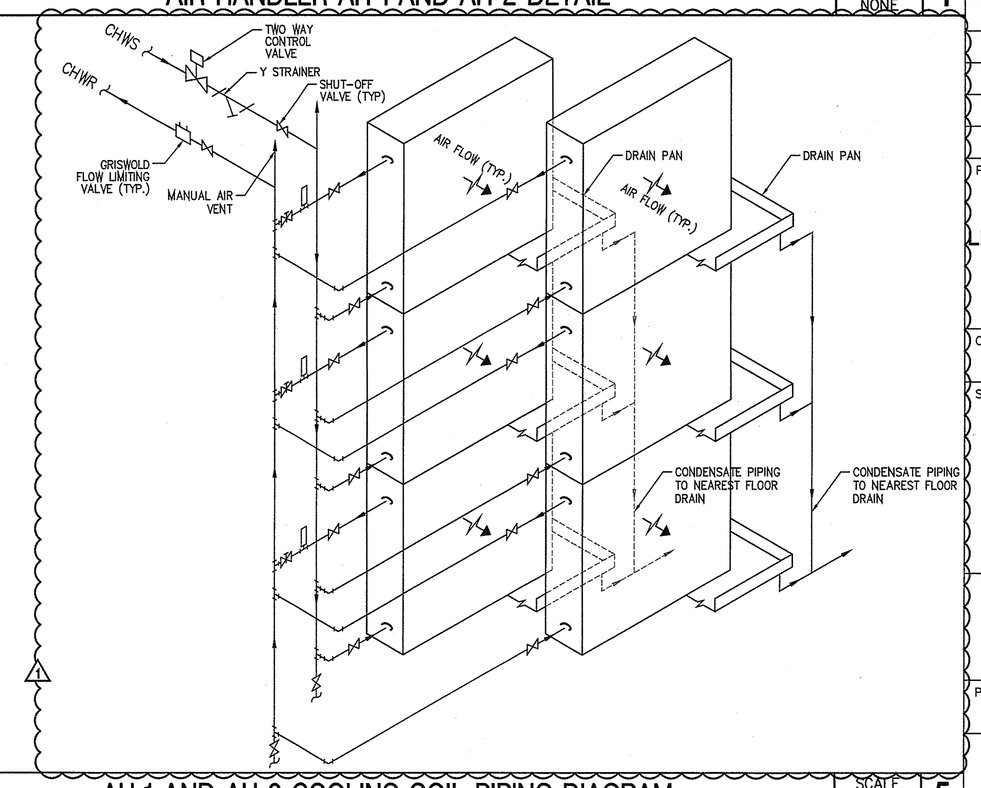

AH-1 AND AH-2 COOLING COIL PIPING DIAGRAM

SCALE NONE | 5

SADDLEBACK COLLEGE

gkkworks
2355 Main Street Suite 220
Irvine | CA 92614
949 250 1500
949 955 2708 fax

Architect Seal

Consultant and Seal

Fundament & Associates Inc.
Engineering Consultants
26 Executive Park, Suite 100, Irvine CA 92614 (949) 251-1121

Agency Approval

No.	Date	Revision/Issue
1		ADDENDUM #4

Project Name

JAMES B. UTT MEMORIAL LEARNING RESOURCE CENTER RENOVATION

28000 Marguerite Parkway
Mission Viejo, California 92692

Checked By | Drawn By

Sheet Title

MECHANICAL DETAILS

Sheet Number

M5.02

Project Number 04-111 | Scale 1/8"=1'-0"

© 2009 gkkworks, All Rights Reserved
NO PART OF THE CONTENTS OF THIS DOCUMENT MAY BE REPRODUCED OR TRANSMITTED IN ANY FORM OR BY ANY MEANS WITHOUT THE WRITTEN PERMISSION OF GKKWORKS.

J:\7113-Saddleback Library\Mech\M502.dwg 09/10/2009
ORS31777-51697 P1 S2 - R C CONSTRUCTION SERVICES - PG 178 OF 235 (P1 S2) 1 SET.1IF - 2/3/2010 - 16:34